EBBR

FlightGear

15 jun 17

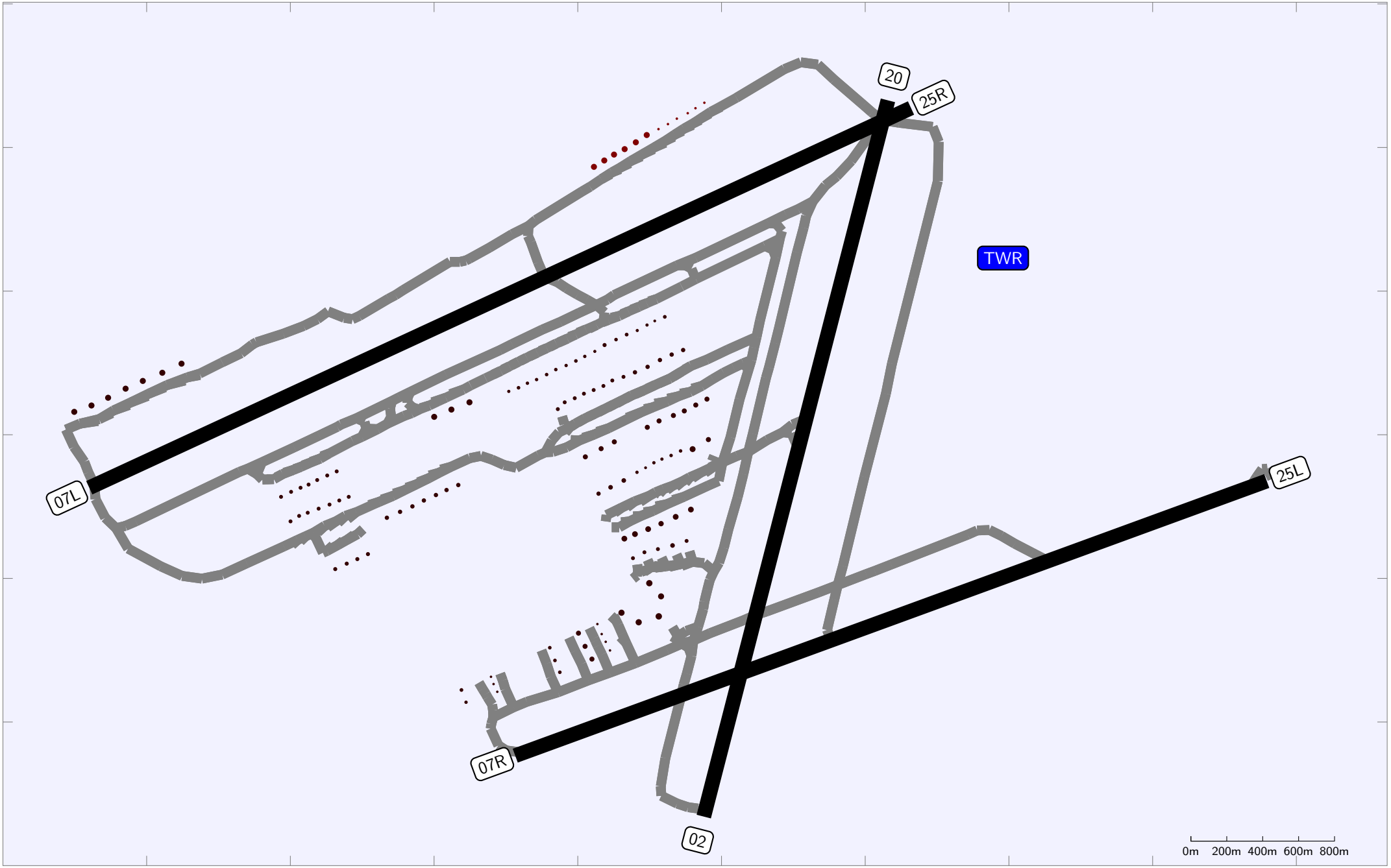

Runway width is not to scale. Not for real world use.

©copyright 2017 the FlightGear team